Fiber Phase Shifter

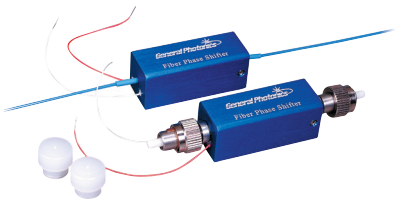

General Photonics' all fiber phase shifter/modulator provides phase shifts up to 15π at frequencies from DC to 20 kHz. The all fiber construction practically eliminates insertion loss and back reflection. This compact device is ideal for fiber laser systems, fiber resonators, and fiber interferometers for precision phase tuning or phase modulation.

Specifications:

Insertion Loss	< 0.1 dB
Return Loss	> 65 dB
Total Phase Shift (0 – 20 kHz)	> 8π
Half-wave Voltage (0 – 20 kHz)	< 20 V
Operating Wavelength [1]	1260 to 1650 nm or 970 to 1300nm standard
PDL	< 0.05 dB
Residual Amplitude Modulation	±0.01 dB
Operating Temperature	0 to 50 °C
Storage Temperature	-40 to 85 °C
Max. Applied Voltage	150 volts
Dimensions	0.55" × 0.55" × 1.38" (w/ pigtail) 0.55" × 0.55" × 2.90" (NoTail™)

Note: Values are referenced without connectors.
1. Other wavelengths and fiber types available by request.

Features:

- Compact size
- Low insertion loss
- Low residual amplitude modulation
- Low PDL
- Low cost
- NoTail™ model available

Applications:

- Fiber interferometers
- Fiber laser systems
- Fiber sensor systems

FAQ: p. 226

Dimensions:

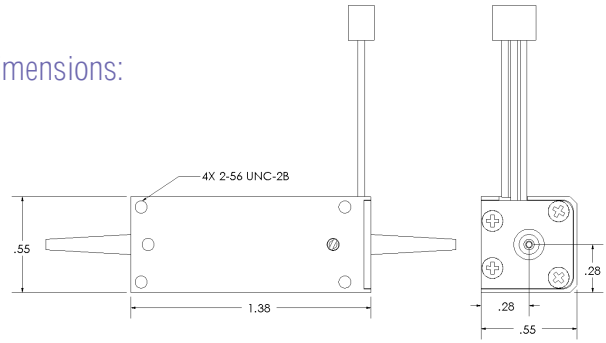

Ordering Information:

FPS — 001 — □□ – □□ – □□ – □□□

Wavelength Range:	Pigtail:	Fiber:	Connector Type:
01 = 1260 - 1650 nm 02 = 970 - 1300 nm	90 = 900 µm jacket NT = NoTail™	SS = SM fiber	FC/PC, FC/APC SC/PC, SC/APC or NC = no connectors Other specify

AInnoTech (주)에이이노텍
FiberAll www.FIBERALL.co.kr 광통신 전문 쇼핑몰! 파이버올!
www.AINNOTECH.com
Email: korea@ainnotech.com
TEL:02.409.3222 FAX.02.409.3229
서울시 송파구 가락동 10-9 현성 B/D 2F